CONNECTION HEAD - type XD-AH

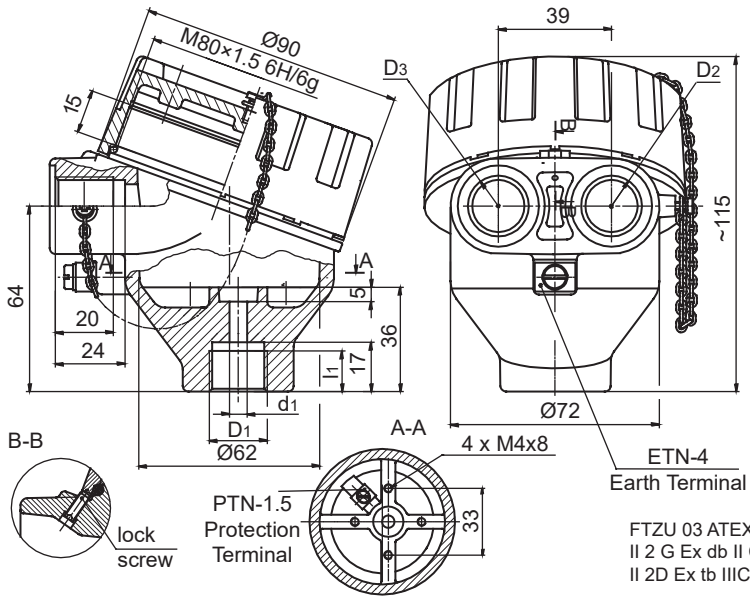

Kg ~0.60 Kg

33

Flameproof
Zone 1, Zone 21
Zone 2, Zone 22

FTZU 03 ATEX 0074U
II 2 G Ex db II C Gb
II 2D Ex tb IIIC Db

IECEx FTZU 14.0003U
Ex db II C Gb
Ex tb IIIC Db

(1)	XD-AH	ORDERING CODE				SPECIFICATION
(2)	Material of elements	4				Metal parts - stainless steel; seals - silicone rubber
		5				Metal parts - stainless steel; seals - fluoroelastomer rubber
(3)	Cable gland thread D_2/D_3 Please choose two variants of thread, separately for D_2 and D_3 **For example: XD-AH-4-M2/CD...**	M2				M20x1.5 6H
		G2				G½; BSP½ (without cert.)
		G3				G¾; BSP¾ (without cert.)
		G4				G⅜; BSP⅜ (without cert.)
		N2				½NPTmod - modified ac. to OIT-17/03
		N3				¾NPTmod - modified ac. to OIT-17/03
		CD				CD = closed (D_3 only)
(4)	Type of process thread D_1	M2				M20x1.5 6H
		M24				M24x1.5 6H
		M27				M27x2 6H
		G2				G½; BSP½ *
		G3				G¾; BSP¾ *
		G4				G⅜; BSP⅜ *
		N2				½NPTmod - modified ac. to OIT-17/03
		N3				¾NPTmod - modified ac. to OIT-17/03
(5)	Symbol of hole d_1 diameter	6				Ø6 $^{+0.04}_{-0.05}$
		6.1				Ø6.1 H8
		8				Ø8 $^{+0.1}_{+0.02}$
		8.1				Ø8.1 H8
		9.6				Ø9.6 H8
		10				Ø10 $^{+0.1}_{+0.02}$
		10.1				Ø10.1 H7
		12.8				Ø12.8 H7
		13				Ø13 (non flameproof)
		15.1				Ø15.1 H7
		M16				M16x1.5 6H
		or other hole on request (non flamefroof)				
(8)	Paint type	C				Creodur - Rafil (~30 µm)
		SE				Spray epoxy (~70 µm)
		SPU				Spray polyurethane on (SE) layer (~120 µm)
(9)	Paint colour	al				alu natural colour (only Creodur - Rafil)
		yc				RAL 1007 daffodil yellow
		ys				RAL 1003 signal yellow
		bs				RAL 5005 signal blue
		sb				RAL 5015 sky blue
		sg				RAL 7032 pebble grey
		gr				RAL 7035 light grey
		ag				RAL 9002 grey white
		sh				RAL 9006 white aluminium
		gs				RAL 9007 grey aluminium
		cw				RAL 9010 pure white

Maine features:

- material of body and cover - aluminium pressure die-castings, max 0.5%Mg
- service temperature:
  T_{serv}= -50÷150ºC - silicone rubber
  T_{serv}= -20÷200ºC - fluoroelastomer rubber
- maximum space for transmitter: Ø58x40mm; Ø42x47mm
- coating: yellow chromating (optionally) and chemically resistant paint (outside only)

Material: aluminium EN AC 44200mod or EN AC 46000.

EN AC 46000 - the kind of material meets the requirements for use in potentially explosive areas.

EN AC 44200mod - the kind of material meets the requirements for use in potentially explosive areas.
In additon, it is characterized by increased strength (pressure) parameters, while at the same time shows reduced copper (Cu) concentration.

Caution:
The type EN AC 44200mod - available for certified products ATEX, IECEx, FM and CSA.
The type EN AC 46000 - available only for certified products ATEX and IECEx.

Ordering example:

(1)	(2)	(3)	(4)	(5)	(8)	(9)
XD-AH	4	- M2/CD	- M24	/8.1	- SE	sh

* in this case hole d1 must be flameproof (for arrange flameproof joint with sensor measuring insert). Flameproof possible only for gas.
For Ex tb - dust (for thread D1) require certification of the complete equipment.